Figure F
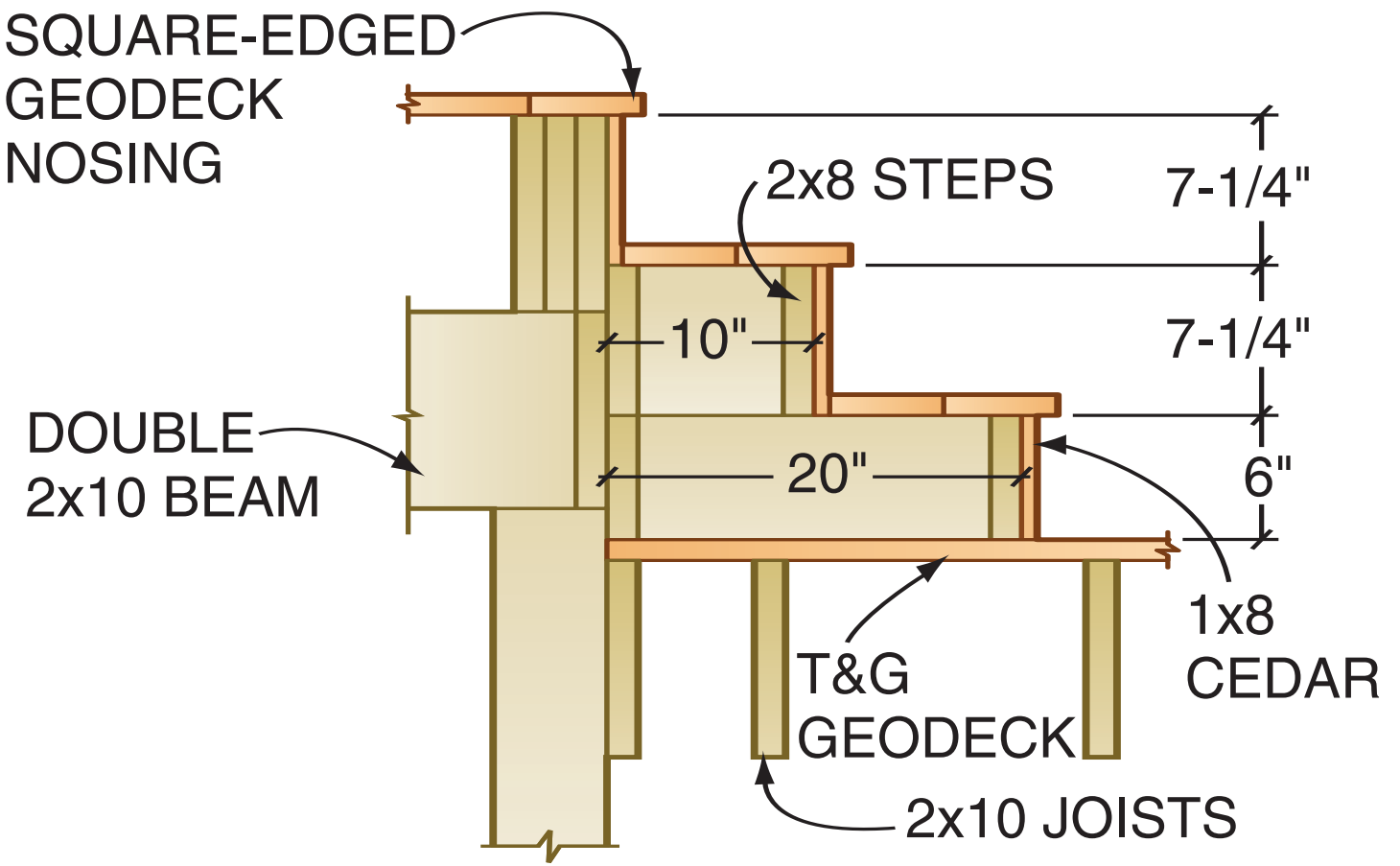
Stair Elevation