Figure D
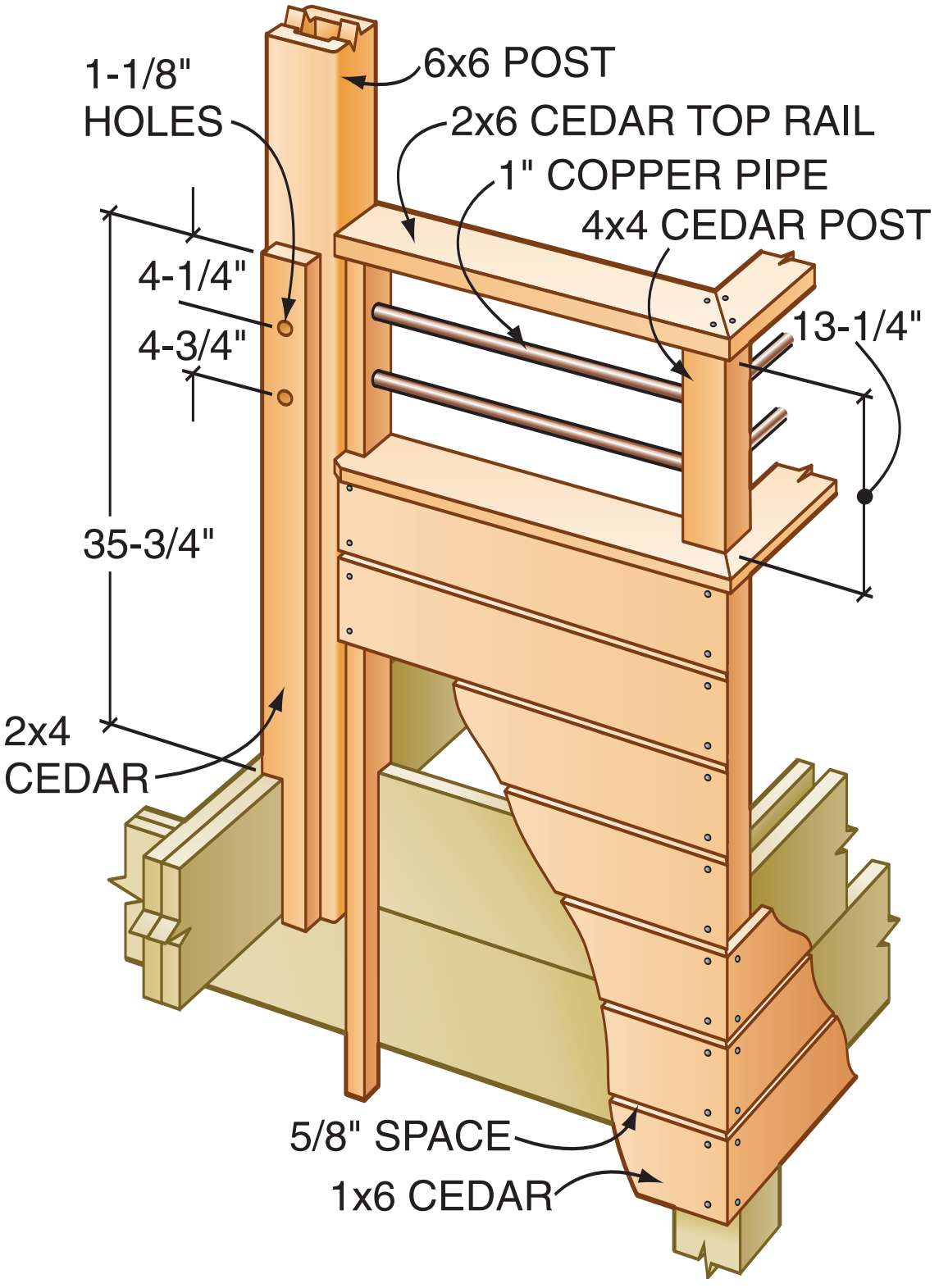
Pergola Post